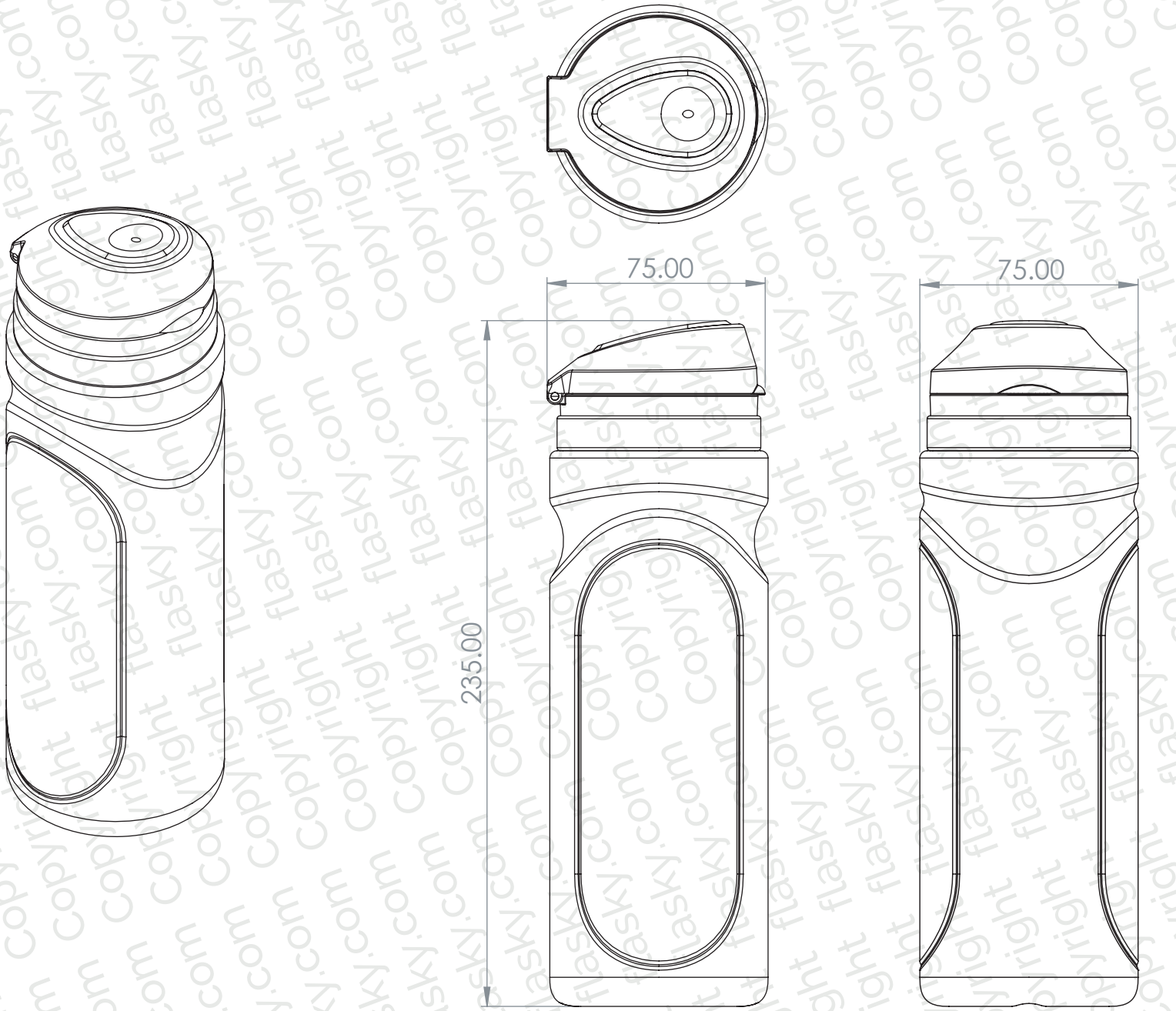

PRODUCT	CODE	DIMENSIONS	SCALE
Shaker	SK	mm	1:2

flasky